Kit Instructions

ExactaBlend™ AGP Advanced Glazing Proportioner

Accessory Kits

332453C

EN

For dispensing two component silicone and urethane materials.
For professional use only.

Not approved for use in explosive atmospheres or hazardous locations.

Refer to ExactaBlend AGP Advanced Glazing Proportioner, Setup-Operation manual for maximum working pressure and model information.

Important Safety Instructions

Read all warnings and instructions in this manual and the ExactaBlend AGP Advanced Glazing Proportioner, Setup-Operation manual. Save all instructions.

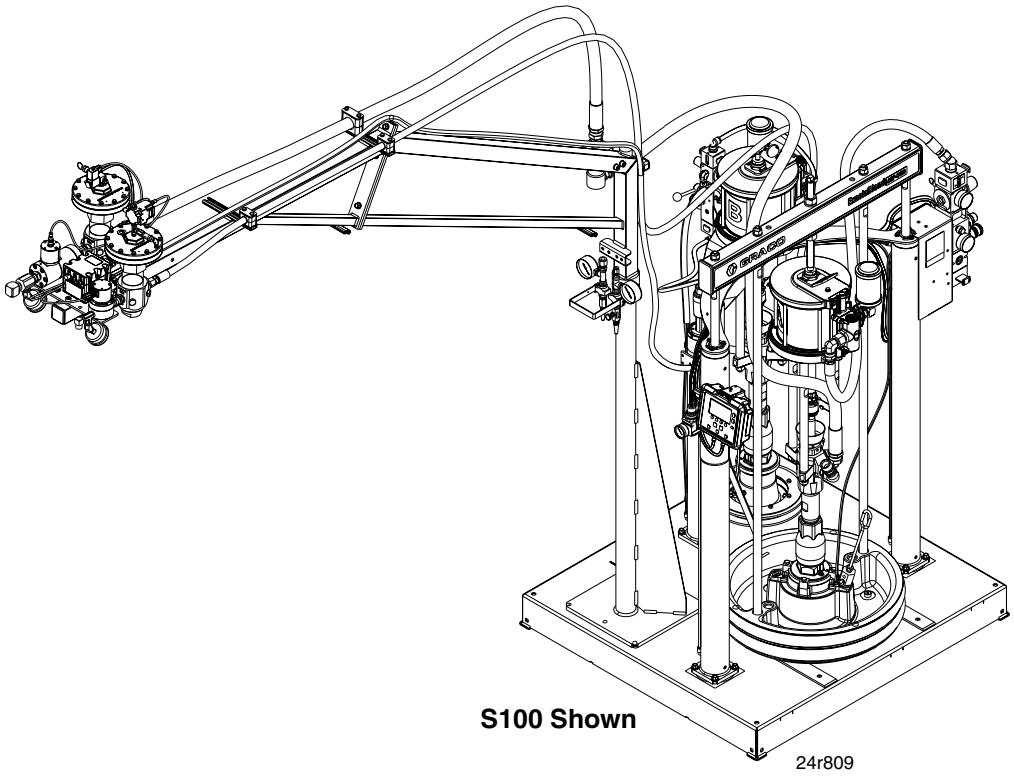

S100 Shown

24r809

PROVEN QUALITY. LEADING TECHNOLOGY.

Related Manuals

Refer to ExactaBlend AGP Advanced Glazing Proportioner, Setup-Operation manual for the complete list of related manuals.

Contents

Related Manuals 2
Contents 2
Installation 3
Light Tower, 24R824 3
S100 Low Level Sensors, 24R935 4
Calibration Check Assembly, 24R777 6
USB Kit, 24R936 7
Caster Kit, 24T091 8
Operation 9
USB Kit, 24R936 9
Troubleshooting 10
Parts 12
Light Tower, 24R824 12
S100 Low Level Sensors, 24R935 13
Calibration Check Assembly, 24R777 14
Calibration Check Module 15
USB Kit, 24R936 16
Caster Kit, 24T091 17
Graco Standard Warranty 18
Graco Information 18

Installation

Light Tower, 24R824

1. Perform the **Shutdown** procedure in the Exact-aBlend AGP Advanced Glazing Proportioner, Setup-Operation manual.

2. Remove the rear nut that secures the fluid plate.

NOTICE
To avoid machine damage or injury, do not remove both bolts.

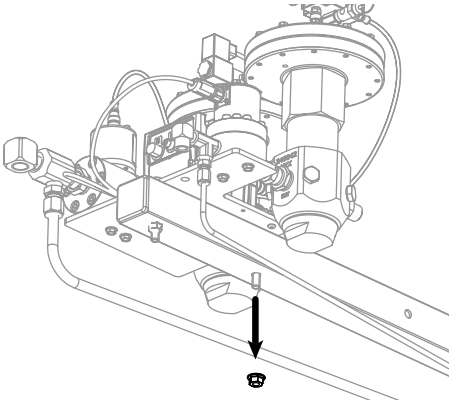

3. Fasten the light tower bracket to the boom assembly. Torque the nut to 24 ft-lb (33 N•m).

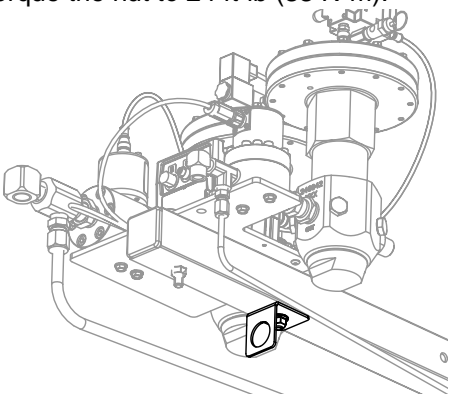

4. Mount the light tower to the bracket. Hand tighten the light tower nut.

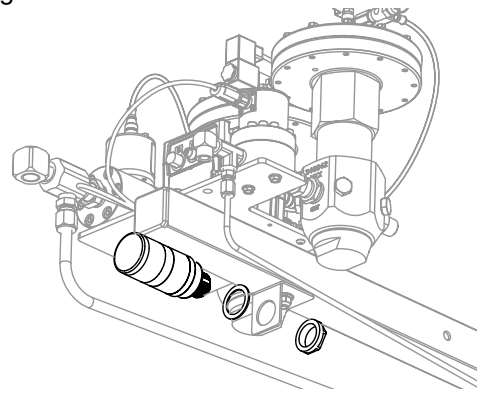

5. Connect the cable from the light tower to port 5 located on the Fluid Control Module (FCM).

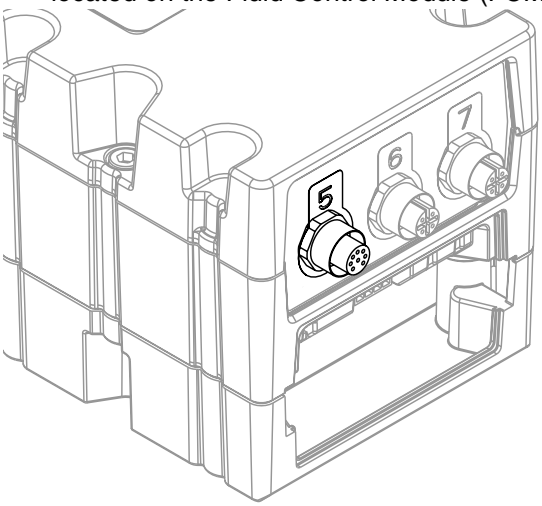

S100 Low Level Sensors, 24R935

1. Perform the **Shutdown** procedure in the Exact-aBlend AGP Advanced Glazing Proportioner, Setup-Operation manual.

2. Remove the air shut off valve cable from port 1 located on the Fluid Control Module (FCM).

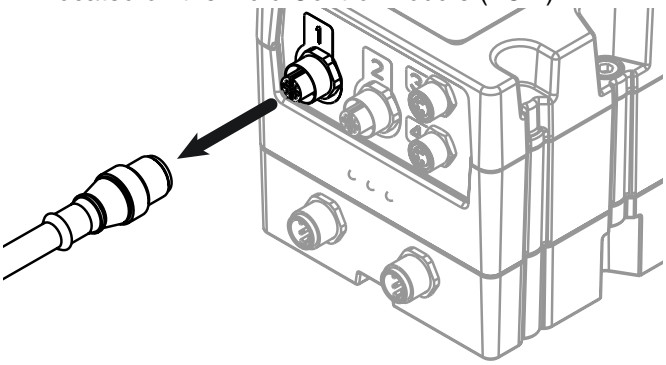

3. Install the splitter into port 1.

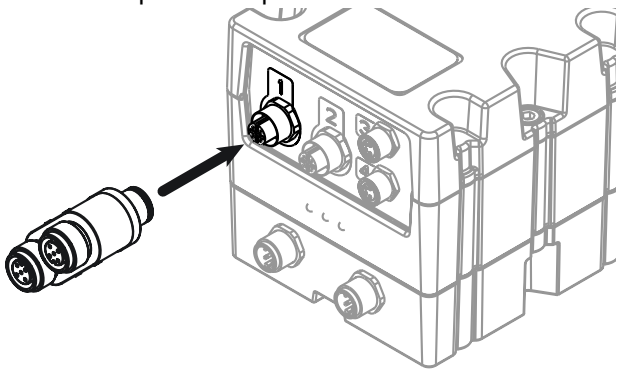

4. Install the air shut off valve cable and the low level cable end labeled “J1B” into the splitter.

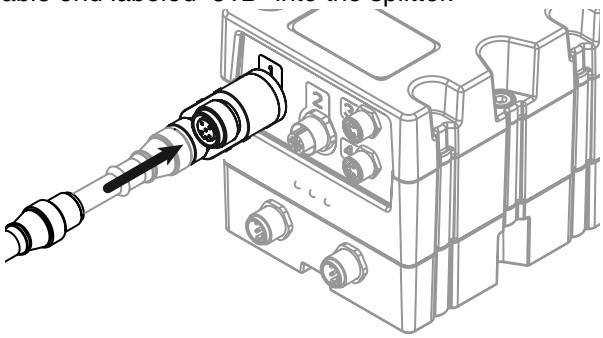

5. Route the low level cable along the boom. Follow the air hoses and electrical lines that are installed.

6. Mount the sensor to the bracket.

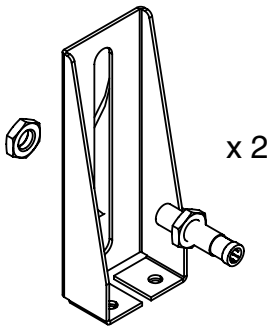

7. Attach the bracket to the electrical enclosure for the base ram. Torque the bolts to 5.1 ft-lb (6.9 N•m).

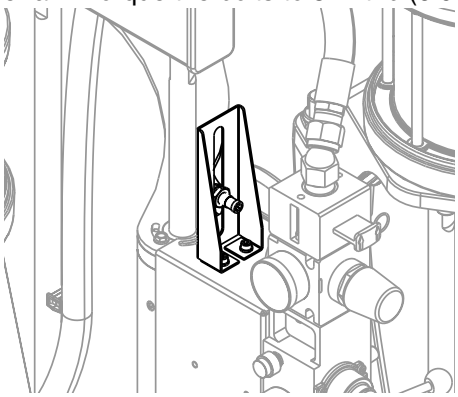

8. Attach the bracket to the pump mast for the catalyst ram. Torque the bolts to 5.1 ft-lb (6.9 N•m).

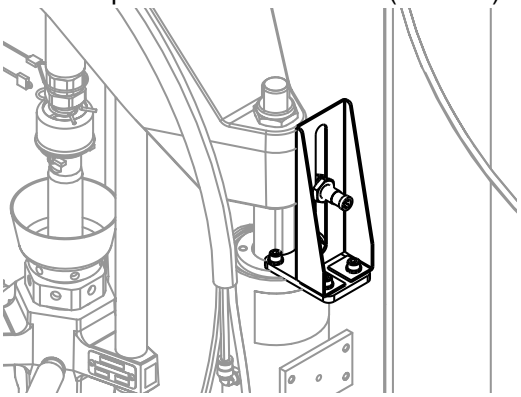

9. Install a collar on the mast shaft for both chemical rams.

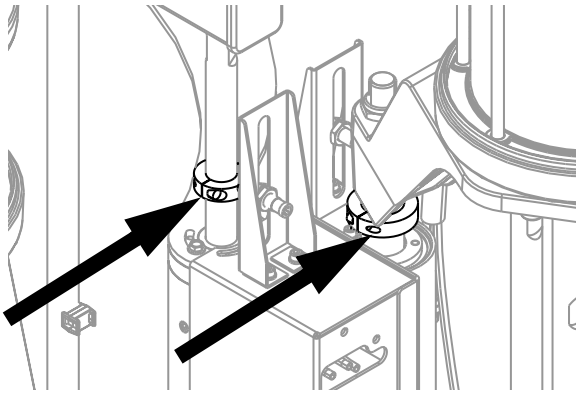

10. Connect the cable end labeled “J1BA” to the base sensor.

11. Connect the cable end labeled “J1BB” to the catalyst sensor.

12. Route and secure access cable so it will not be damaged during normal machine operation.

13. Turn the power on at the electrical enclosure.

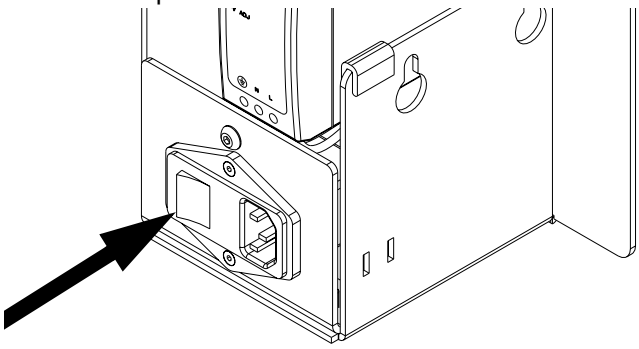

14. Slide the collar so it is at the level of the sensor.

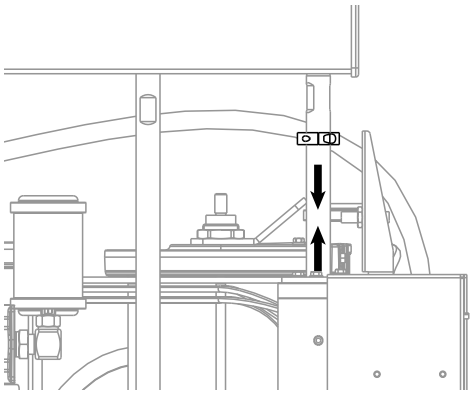

15. Adjust the sensor until it senses the collar. A light will aluminate on the sensor to visually show it is activated.

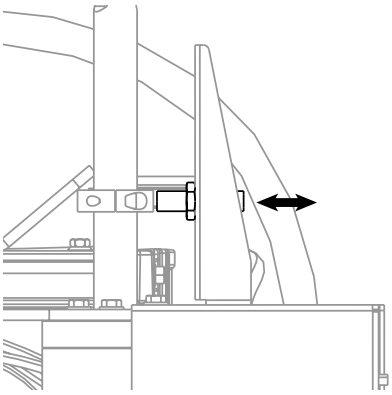

16. Tighten the sensor to its current position.

17. Adjust the collar on the shaft to the desired height and tighten. The placement of the collar will determine when the machine will recognize an empty drum.

18. Repeat steps 14 through 17 for the other chemical sensor.

19. Navigate to the **Setup Screen 1** on the Display Module (DM) and activate the low level sensor option.

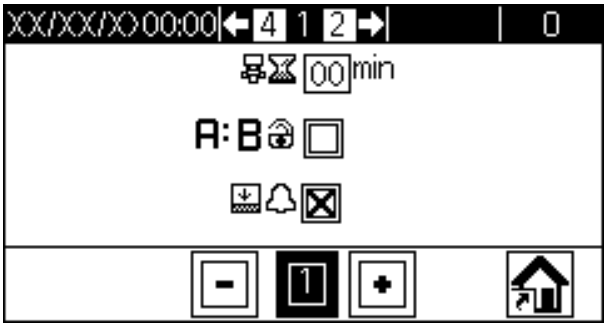

Calibration Check Assembly, 24R777

1. Perform the **Shutdown** procedure in the Exact-aBlend AGP Advanced Glazing Proportioner, Setup-Operation manual.

2. Install the hose clamps onto the boom assembly. Hand tighten all hose clamps. Refer to **Calibration Check Assembly, 24R777**, page 14, for correct screw locations.

NOTE: The base material tube is 0.5 in. (1.3 cm) in diameter. Verify the hose clamps are installed on the correct side of the boom assembly.

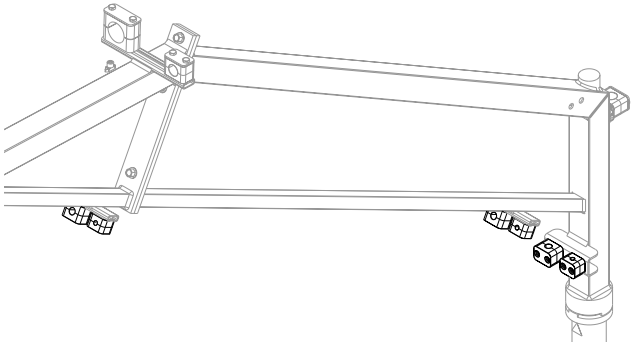

3. Remove the pressure gauges and fittings.

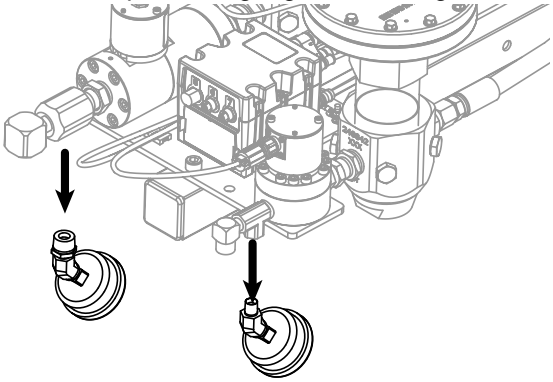

4. Install the tube fittings. Tighten the fittings to prevent leaking.

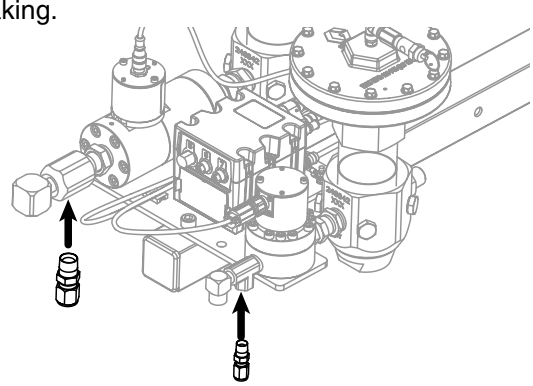

5. Install the material tube lines onto the boom assembly. Tighten all fittings to prevent leaking.

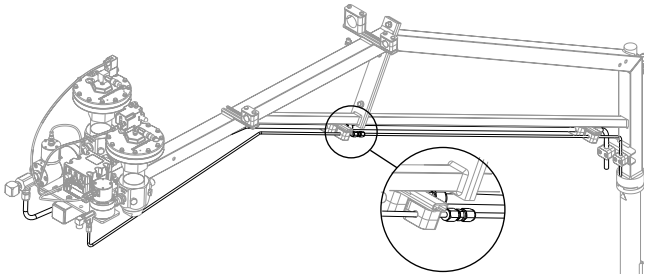

6. Install the check valve assembly onto the tube lines. Tighten all fittings to prevent leaking.

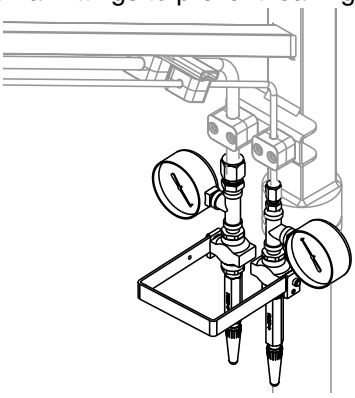

USB Kit, 24R936

1. Perform the **Shutdown** procedure in the ExactaBlend AGP Advanced Glazing Proportioner, Setup-Operation manual.

2. Mount the USB Module to the side of the electrical enclosure. Torque the bolts to 2.6 ft-lb (3.5 N•m).

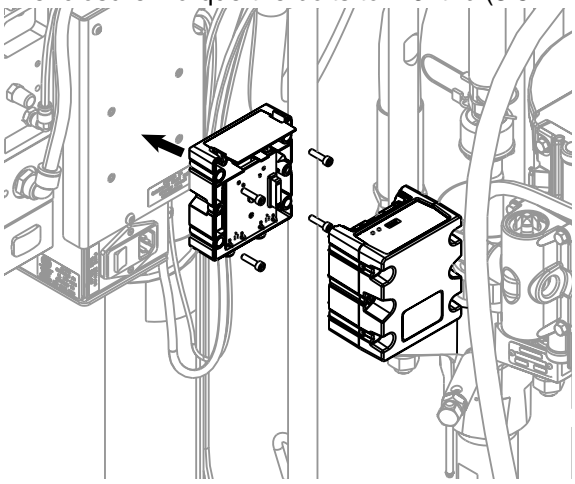

3. Connect the adapter to the USB Module. Connect the CAN cable to the adapter. Route the CAN cable along the boom. Follow the air hoses and electrical lines that are installed.

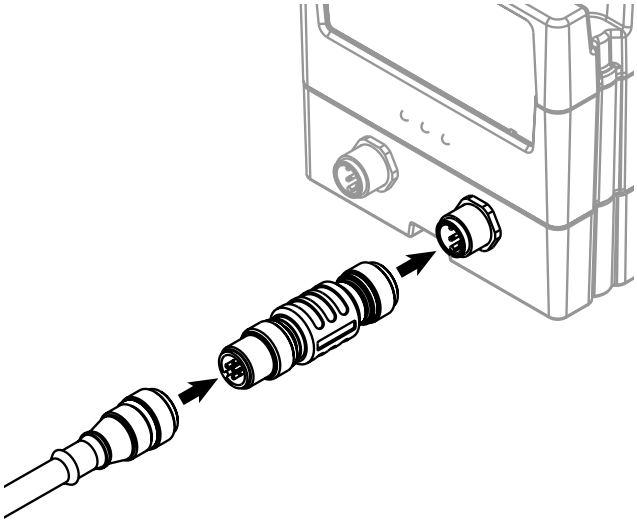

4. Connect the CAN cable to the Fluid Control Module (FCM).

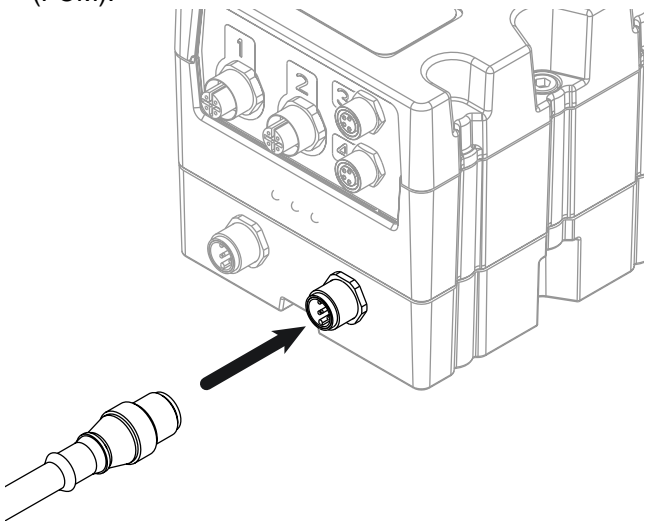

5. Install the software upgrade token (16V853) into the Display Module (DM) and cycle the power. Refer to the Graco Control Architecture™ Module Programming manual for more details.

6. Install the software upgrade token (16V853) into the USB module and cycle the power.

7. Refer to the ExactaBlend AGP Advanced Glazing Proportioner, Setup-Operations manual for screen details.

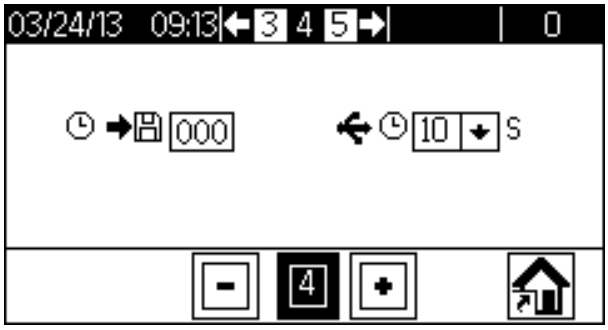

Caster Kit, 24T091

1. Mount the caster to the bracket. Apply medium strength thread locker to the threads. Torque the fasteners to 21 ft-lb (29 N•m).

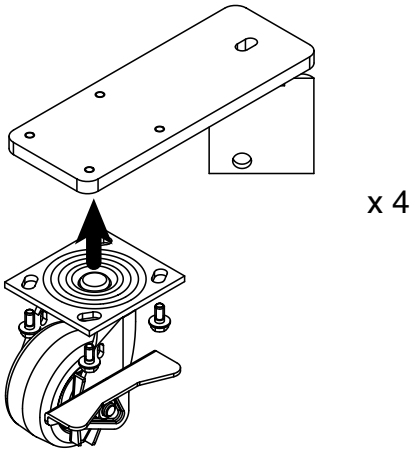

2. Lift the machine until it is 3 in. (8 cm) off of the ground.

NOTICE
Injury may occur if the machine is lifted and not secured to prevent falling. Rest the machine on stands or blocks while installing the caster kit.

3. Fasten the bracket to the base frame. Apply medium strength thread locker to the threads. Torque the bolts to 30 ft-lb (40 N•m).

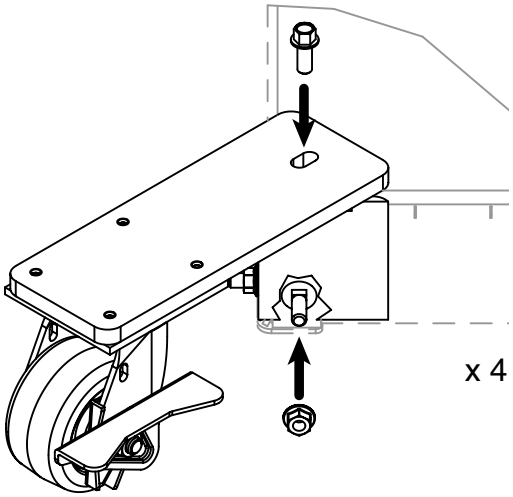

4. Lower the machine.

Operation

USB Kit, 24R936

When a USB memory device is inserted into the USB module, a status icon will appear on the DM screen. The icon will appear as shown when downloading is complete.

Data

Error Codes

This file shows the date, time, error/event codes, and the status of the codes. Refer to **DM Error Codes** within the ExactaBlend AGP Advanced Glazing Proportioner, Setup-Operation manual for code information.

NOTE: The codes will have the following for the status column:

“0” - Error/event was generated
“1” - Machine acknowledged the error/event. There is no user acknowledgement required.
“2” - User acknowledged the error/event.

	A	B	C	D
1	Error_Log			
2	S/N:FFFFFFFF			
3	Software_Part_Number:15W201			
4	Software_Version:1.10.001			
5	6/4/2013 13:18			
6				
7	Date	Time	Error/Event	--
8	6/4/2013	11:26:29	EMM0	2
9	6/4/2013	11:26:46	ELM0	2
10	6/4/2013	11:26:46	EBDX	2
11	6/4/2013	11:26:46	E9D0	2
12	6/4/2013	11:27:12	EGC6	2
13	6/4/2013	11:27:13	EGB9	2
14	6/4/2013	11:27:13	EGA9	2
15	6/4/2013	11:27:15	EGAA	2
16	6/4/2013	11:27:16	EGBA	2
17	6/4/2013	11:27:20	EGA9	2

Run Data

This file shows the date, time, target ratio, actual ratio, average flow rate, and both pump A and pump B chemical dispenses. All chemical dispense values are shown in kilograms. The information is recorded at 5 second intervals.

NOTE: The data is recorded only when the system is in the “OK” state and during normal run mode dispensing.

	B	C	D	E	F	G
er:15W201						
0.001						
4/2013 13:18						
	Time	Target_Ratio	Actual_Ratio	Average Flow Rate	PUMP_A:_Total_Dispensed	PUMP_B:_Total_Dispensed
6/4/2013	11:32:20	13.3	0	0	2908	364.25
6/4/2013	11:32:25	13.3	0	949	2909.5	364.75
6/4/2013	11:32:30	13.3	0	889	2911	364.75
6/4/2013	11:32:35	13.3	0	996	2912.75	365
6/4/2013	11:32:40	13.3	0	0	2913.75	365
6/4/2013	11:32:45	13.3	0	0	2913.75	365
6/4/2013	11:32:50	13.3	0	0	2913.75	365
6/4/2013	11:33:18	13.3	0	0	2913.75	365

Software Data

This file shows the date, time, part number, and software versions currently installed on the machine.

NOTE: The file will only show the information when the download depth is set to “0”.

	A	B	C	D
1	Software			
2	S/N:FFFFFFFF			
3	Software_Part_Number:15W201			
4	Software_Version:1.10.001			
5	6/4/2013 13:18			
6				
7	Date	Time	Node:	Software_Version:
8	00/00/2000	0:00:00	16U599	1.02.186
9	00/00/2000	0:00:00	16U275	1.02.189
10	00/00/2000	0:00:02	16V205	1.01.012

Troubleshooting

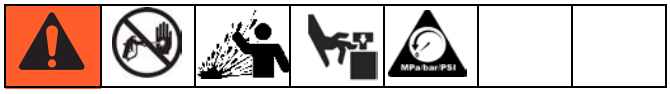

1. Follow **Pressure Relief Procedure** in the ExactaBlend AGP Advanced Glazing Proportioner, Setup-Operation manual before checking or repairing gun.
2. Check all possible problems and causes before disassembling gun.

Problem	Cause	Solution
Light Tower		
Light does not blink green, red, and off in sequence when the machine is first turned on.	Bad connection or cable	Ensure cable is connected or replace the cable.
	Bad light stack.	Replace light stack.
S100 Low Level Sensors		
The sensor does not activate.	The low level sensor option has not been activated on the DM.	Navigate to **Screen 1** and activate the low level sensor option.
	The sensor has not been mounted correctly.	Adjust the sensor until it is activated by the collar.
	The collar has been installed too high on the shaft.	Lower the collar until the sensor is activated.
	Bad connection or cable	Ensure cable is connected or replace the cable.
	Bad sensor	Replace sensor.
USB Kit		
Screen 4 does not show the USB option.	Bad connection or cable.	Ensure cable is connected or replace the cable.
	Bad GCA components.	Replace the GCA components.

Parts

Light Tower, 24R824

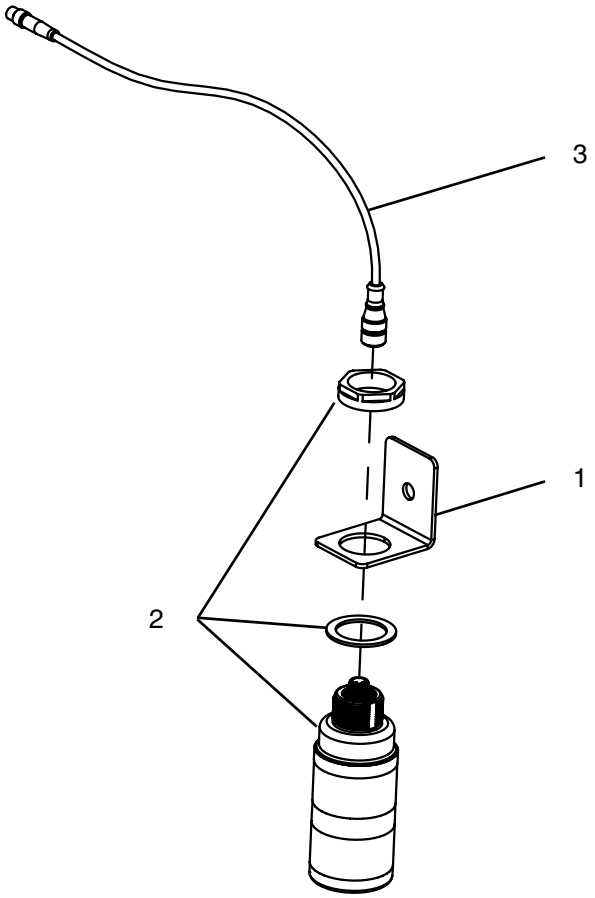

FIG. 1: Light Tower

Ref	Part	Description	Quantity
1	---	BRACKET, tower, light, 30mm	1
2	127187	LIGHT, tower, 30mm, red / green / alarm	1
3	127184	HARNESS, m12xm12	1

--- Not available for individual sale.

S100 Low Level Sensors, 24R935

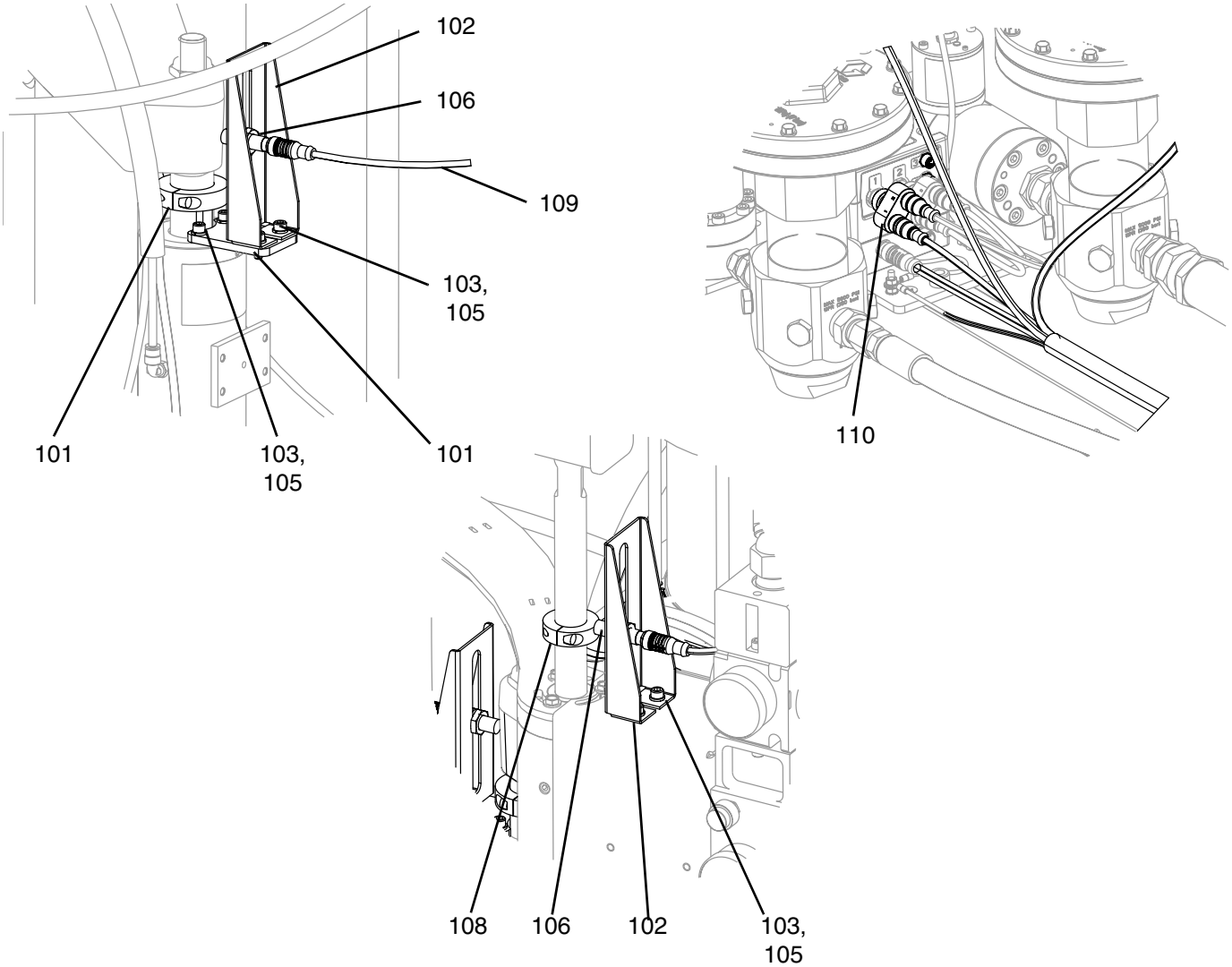

FIG. 2: Low Level Sensors

Ref	Part	Description	Quantity
101	---	BRACKET, sensor, level, catalyst	1
102	---	BRACKET, sensor, low/empty	2
103	---	WASHER, lock, 1/4	6
104	---	SCREW, cap, socket head, 1/4-20x5/8	2
105	---	SCREW, socket head, M6-1x16mm	4
106	122716	SENSOR, inductive, m12	2
107	127140	COLLAR, clamp, 1-3/8 id, 2piece	1
108	127141	COLLAR, clamp, 1 id, 2piece	1
109	127137	HARNESS, splitter, m12, 5pin	1
110	126520	CONNECTOR, splitter, m12	1

--- Not available for individual sale.

Calibration Check Assembly, 24R777

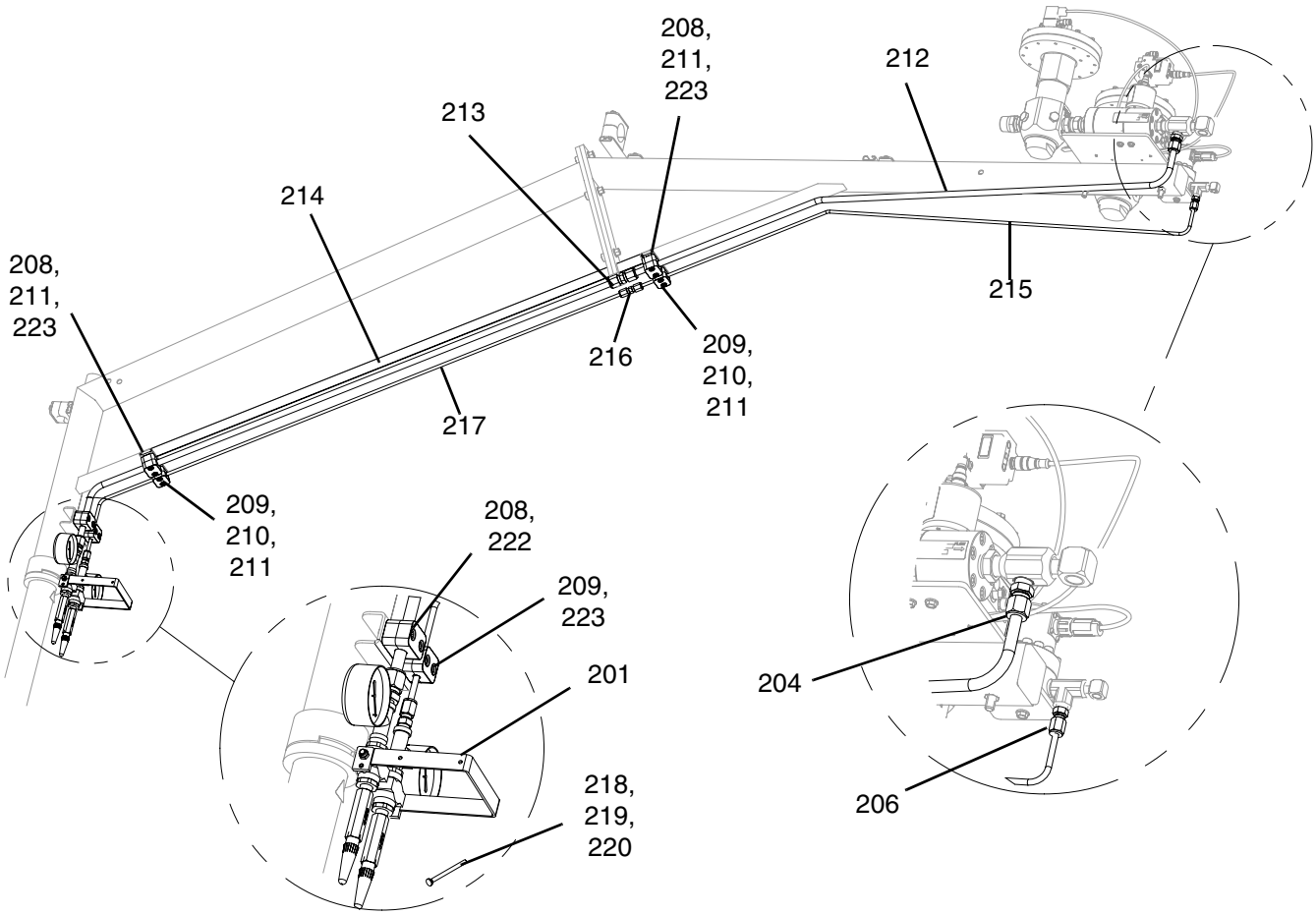

FIG. 3: Calibration Check Assembly

Ref	Part	Description	Quantity
201	---	MODULE, ratio check,	1
204	127071	FITTING, flareless, 1/2 npt x 1/2 tube	1
206	127070	FITTING, flareless, 1/4 npt x 1/4 tube	1
208	126691	CLAMP, 1/2 in. od hose	3
209	126682	CLAMP, 1/4 in. od hose	3
210	---	SCREW, cap, socket head, 1/4-20x3/4	4
211	122643	NUT, rail	8
212	16V586	TUBE, ratio, base, inlet	1
213	127102	FITTING, flareless, 1/2 tube x 1/2 tube	1
214	16V587	TUBE, ratio, base, outlet, 1/2	1
215	16V588	TUBE, ratio, catalyst, inlet, 1/4	1
216	127103	FITTING, flareless, 1/4 tube x 1/4 tube	1
217	16V589	TUBE, ratio, outlet, 1/4	1
218	16V356	PIN, restrictor, #1, 0.094 in.	1
219	16V357	PIN, restrictor, #3, 0.102 in.	1
220	16V359	PIN, restrictor, #2, 0.098 in.	1
222	---	SCREW, cap, socket head, 1/4-20x1-1/4	2
223	---	SCREW, cap, socket head, 1/4-20x1	6

--- Not available for individual sale.

Calibration Check Module

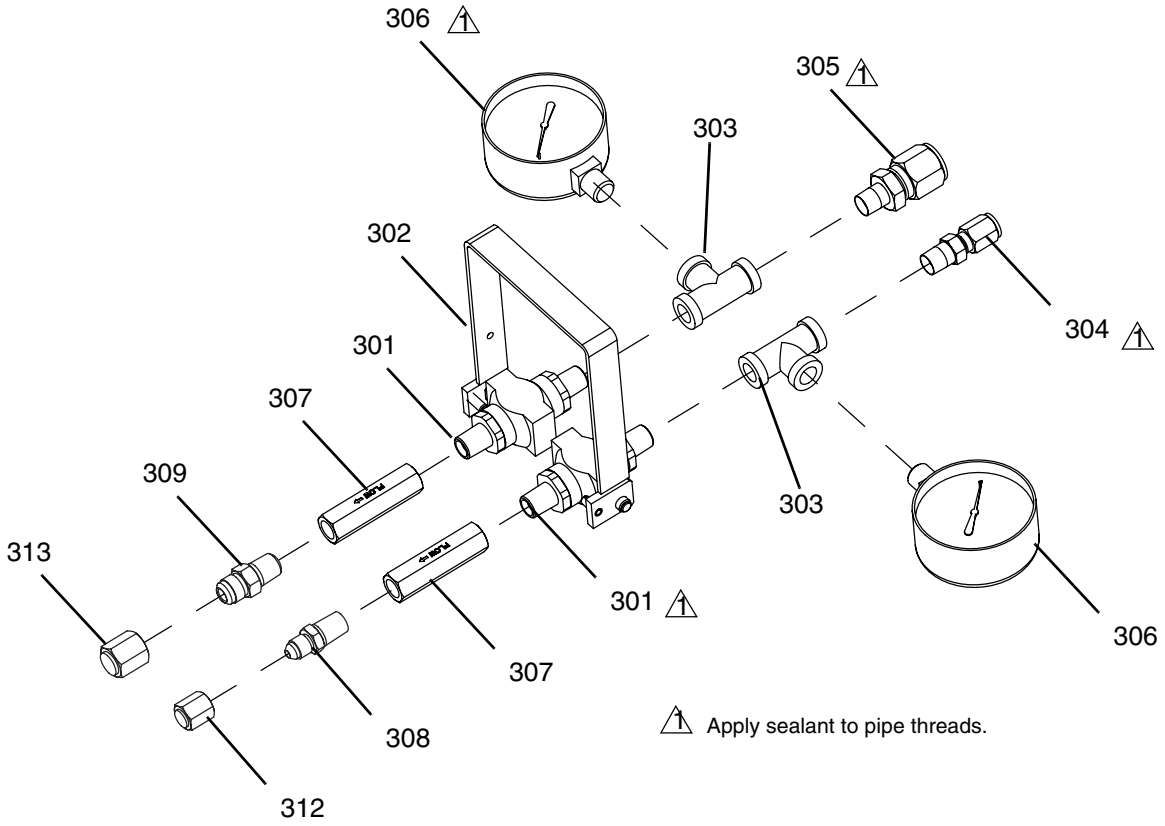

FIG. 4: Calibration Check Module

Ref	Part	Description	Quantity
301	215622	VALVE, ball	2
302	217562	LEVER, valve	1
303	104984	FITTING, tee, pipe	2
304	127070	FITTING, flareless, 1/4 npt x 1/4 tube	1
305	127051	FITTING, flareless, 1/4 npt x 1/2 tube	1
306	112941	GAUGE, pressure, fluid	2
307	16V360	HOUSING, restrictor, 1/4 npt	2
308	127324	FITTING, adapter, 1/4 npt x 04 jic	1
309	116704	ADAPTER, 9/16-18 jic x 1/4 npt	1
312	127325	FITTING, cap, 04 jic	1
313	127326	FITTING, cap, 06 jic	1

USB Kit, 24R936

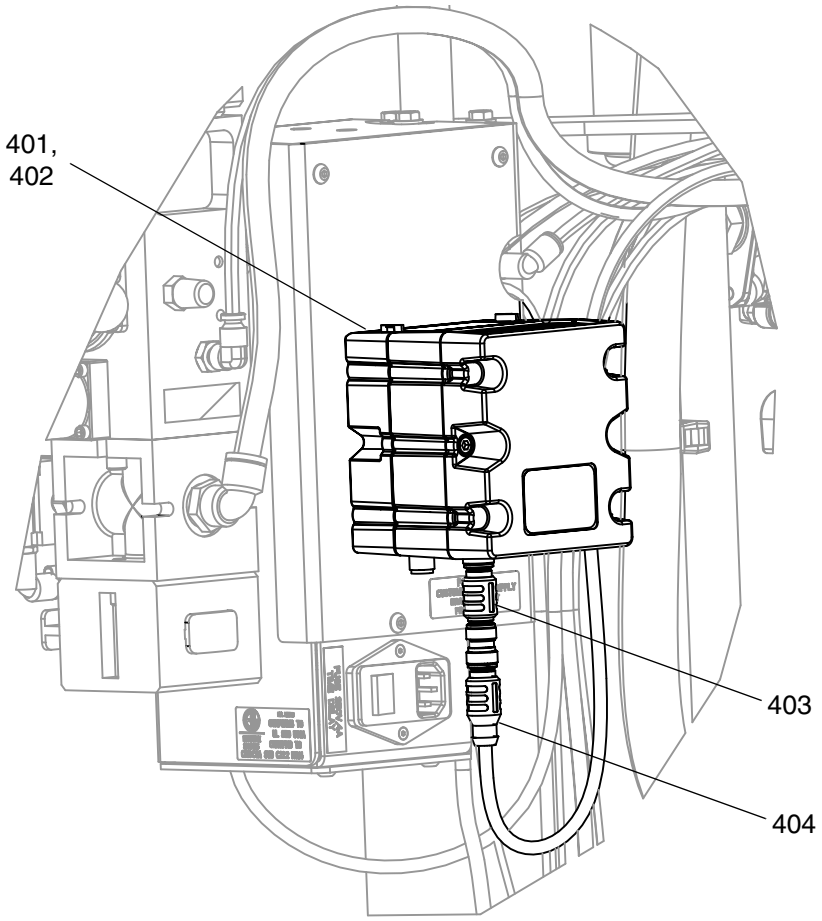

FIG. 5: USB Kit

Ref	Part	Description	Quantity
401	24T005	MODULE, GCA, cube	1
402	---	SCREW, socket head, 10-32x0.75	4
403	16T072	ADAPTER, cable, CAN, IS to non IS	1
404	120952	CABLE, CAN, female / female 4.0 meter	1
405	16V853	SOFTWARE, GCA	1

Caster Kit, 24T091

1 Apply medium strength thread locker to threads.

2 Torque to 30 ft-lb (40 N•m).

3 Torque to 21 ft-lb (29 N•m).

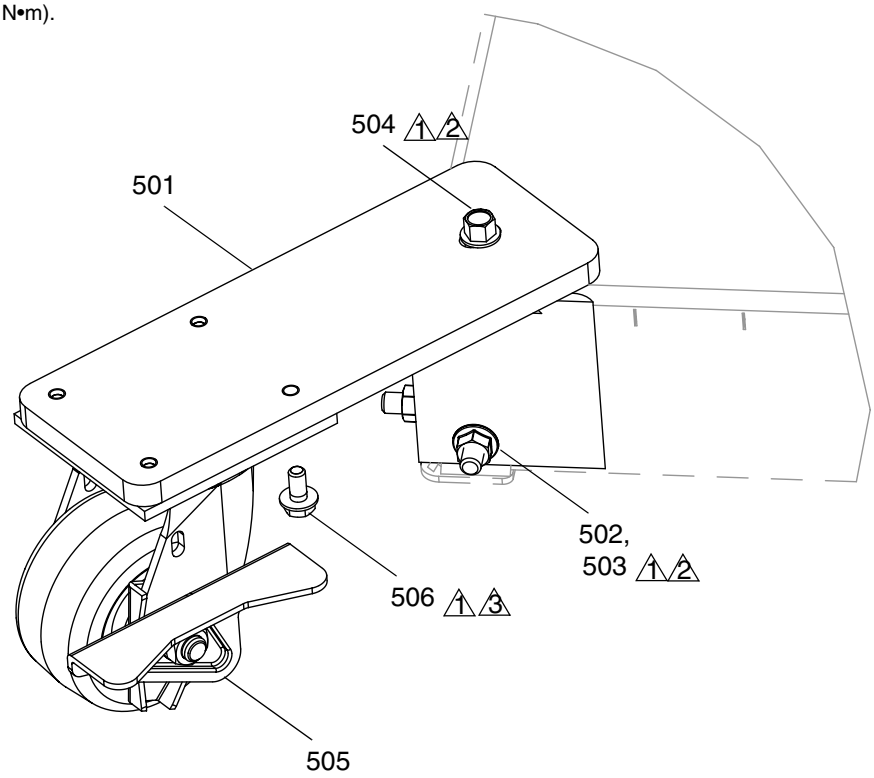

FIG. 6: Caster Kit

Ref	Part	Description	Quantity
501	---	BRACKET, caster	4
502	---	BOLT, carriage, M10-1.5x30mm	8
503	---	NUT, hex, flange, serrated, M10-1.5	8
504	---	SCREW, machine, hex, M10-1.5x25mm	4
505	---	CASTER, swivel, brake	4
506	---	SCREW, cap, hex head, M8-1.25x16mm	16

--- Not available for individual sale.

Graco Standard Warranty

Graco warrants all equipment referenced in this document which is manufactured by Graco and bearing its name to be free from defects in material and workmanship on the date of sale to the original purchaser for use. With the exception of any special, extended, or limited warranty published by Graco, Graco will, for a period of twelve months from the date of sale, repair or replace any part of the equipment determined by Graco to be defective. This warranty applies only when the equipment is installed, operated and maintained in accordance with Graco's written recommendations.

This warranty does not cover, and Graco shall not be liable for general wear and tear, or any malfunction, damage or wear caused by faulty installation, misapplication, abrasion, corrosion, inadequate or improper maintenance, negligence, accident, tampering, or substitution of non-Graco component parts. Nor shall Graco be liable for malfunction, damage or wear caused by the incompatibility of Graco equipment with structures, accessories, equipment or materials not supplied by Graco, or the improper design, manufacture, installation, operation or maintenance of structures, accessories, equipment or materials not supplied by Graco.

This warranty is conditioned upon the prepaid return of the equipment claimed to be defective to an authorized Graco distributor for verification of the claimed defect. If the claimed defect is verified, Graco will repair or replace free of charge any defective parts. The equipment will be returned to the original purchaser transportation prepaid. If inspection of the equipment does not disclose any defect in material or workmanship, repairs will be made at a reasonable charge, which charges may include the costs of parts, labor, and transportation.

THIS WARRANTY IS EXCLUSIVE, AND IS IN LIEU OF ANY OTHER WARRANTIES, EXPRESS OR IMPLIED, INCLUDING BUT NOT LIMITED TO WARRANTY OF MERCHANTABILITY OR WARRANTY OF FITNESS FOR A PARTICULAR PURPOSE.

Graco's sole obligation and buyer's sole remedy for any breach of warranty shall be as set forth above. The buyer agrees that no other remedy (including, but not limited to, incidental or consequential damages for lost profits, lost sales, injury to person or property, or any other incidental or consequential loss) shall be available. Any action for breach of warranty must be brought within two (2) years of the date of sale.

GRACO MAKES NO WARRANTY, AND DISCLAIMS ALL IMPLIED WARRANTIES OF MERCHANTABILITY AND FITNESS FOR A PARTICULAR PURPOSE, IN CONNECTION WITH ACCESSORIES, EQUIPMENT, MATERIALS OR COMPONENTS SOLD BUT NOT MANUFACTURED BY GRACO. These items sold, but not manufactured by Graco (such as electric motors, switches, hose, etc.), are subject to the warranty, if any, of their manufacturer. Graco will provide purchaser with reasonable assistance in making any claim for breach of these warranties.

In no event will Graco be liable for indirect, incidental, special or consequential damages resulting from Graco supplying equipment hereunder, or the furnishing, performance, or use of any products or other goods sold hereto, whether due to a breach of contract, breach of warranty, the negligence of Graco, or otherwise.

FOR GRACO CANADA CUSTOMERS
The Parties acknowledge that they have required that the present document, as well as all documents, notices and legal proceedings entered into, given or instituted pursuant hereto or relating directly or indirectly hereto, be drawn up in English. Les parties reconnaissent avoir convenu que la rédaction du présente document sera en Anglais, ainsi que tous documents, avis et procédures judiciaires exécutés, donnés ou intentés, à la suite de ou en rapport, directement ou indirectement, avec les procédures concernées.

Graco Information

For the latest information about Graco products, visit www.graco.com.

TO PLACE AN ORDER, contact your Graco distributor or call to identify the nearest distributor.
Phone: 612-623-6921 **or Toll Free:** 1-800-746-1334 **Fax:** 330-966-3006

All written and visual data contained in this document reflects the latest product information available at the time of publication. Graco reserves the right to make changes at any time without notice.

For patent information, see www.graco.com/patents.

Original instructions. This manual contains English. MM 332453

Graco Headquarters: Minneapolis
International Offices: Belgium, China, Japan, Korea

GRACO INC. AND SUBSIDIARIES • P.O. BOX 1441 • MINNEAPOLIS MN 55440-1441 • USA

Copyright 2013, Graco Inc. All Graco manufacturing locations are registered to ISO 9001.
www.graco.com
Revised January 2014